TDA1701 Sound Channel IC for TV Receivers (18-Pin Plastic Package with 2 Cooling Fins)

The TDA1701 is a bipolar integrated circuit containing all stages required in the sound channel of a TV receiver. It is suitable for mains as well as battery-operated receivers. The cooling tabs projecting from the case on either side are sufficiently large for a 2 W output power without additional heat sink facilities. If these tabs are cooled further, for example by being soldered to a sufficiently large copper-clad area of the printed circuit board, an output power up to 4 W is permissible.

As can be seen from the Figures, the TDA1701 requires only few external components. It consists of a limiting IF amplifier, a coincidence demodulator, a circuit for electronic volume adjustment and a complete AF amplifier with preamplifier, driver and output stage in series push-pull connection. The IF section has excellent limiting properties and operates with high AM suppression. The coincidence demodulator supplies a low-distortion AF signal. For connection to a video recorder, the TDA1701 is provided with a direct demodulator output which is not affected by the electronic volume control.

In order to receive signals from the AF output of a video recorder or from other AF signal sources, the TDA1701 is provided with an AF input which can be influenced by the electronic volume control. A switching voltage allows the IF section to be switched off. The output amplifier is protected against overheating. At a chip temperature of approximately 150 °C the AF voltage at the driver transistor is short-circuited.

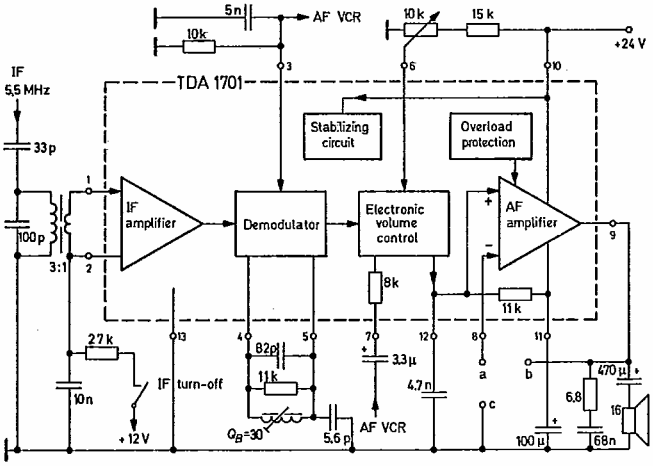

TDA1701 Application Circuit

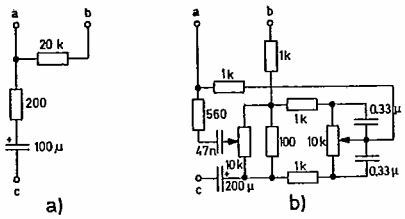

Circuitry between terminals a, b and c of the circuit above
a) without tone control network, with linear frequency response
b) with tone control network

TDA1236 Sound Channel IC for TV Receivers (18-Pin Plastic Package)

Bipolar integrated circuit for the sound channel of TV receivers. The device comprises a symmetrical IF amplifier with excellent limiting properties, a symmetrical coincidence demodulator, a volume control circuit featuring Fletcher-Munson characteristics, bass and treble control, and an impedance converter output stage for directly driving a power amplifier.

The volume control, bass and treble control circuits are d. c. driven, so that only simple linear potentiometers are needed, providing an extremely simple circuit design. Only few external components are needed. When used with a video recorder, the IF amplifier can be rendered inoperative electronically and the AF connection for the VCR can be switched over from record to playback.

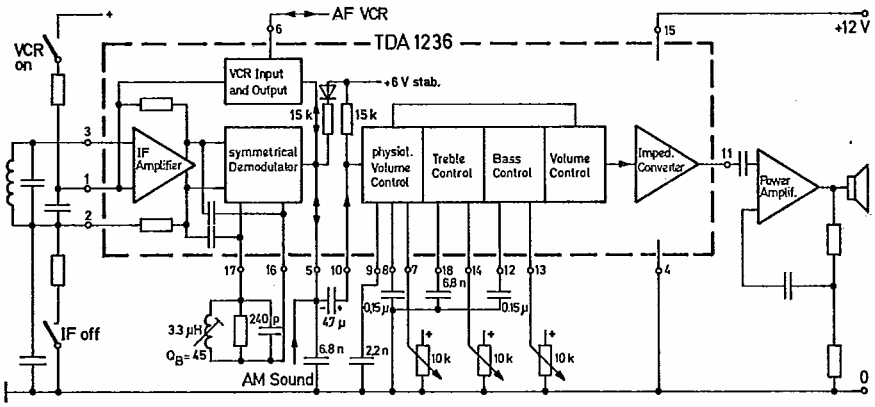

TDA1236 Block Diagram and Application Circuit